Orange GNOCe ONAP PITEC robot use-case

1 st stage and development plan

Marian Skorupa

OPNFV Plugfest &ONAP Developer Design Forum 2019
January 8-11

Topics

- Orange GNOCe ONAP PITEC rationale
- ONAP & PITEC building blocks
- Issue – distant OSS tools connectivity failures
- PITEC connectivity chain
- PITEC set up architecture
- ONAP PITEC set up containers
- PITEC open loop – ticketing
- ONAP PITEC analytics

ONAP PITEC rationale

- The ONAP PITEC Robot E2E user experience solution provides continuous control over whole GNOCe operation scope toolbox accessibility and provide operations teams with visibility and control of network environments even if complex and geographically dispersed with multi vendor factor
- The intelligent automation of the OSS tools of multinational operations will support services reliability by accessibility control, discovering quality of application connectivity and proactive service continuity risk analysis.
- Automating business processes relating to tools access management provides organizations quantifiable savings in terms of personnel time by freeing up staff to focus on more strategic, more business critical tasks
- ONAP allows us to integrate the tooling box used for network management and to automate operations e.g to on-board and instantiate IPTEC probe VNFs, and to collect measurements results through VES collector and DMaaP.

For any questions, suggestions, feedback or comments to the solution, please e-mail leader of the ONAP PITEC project – marian.skorupa@orange.com

Remark

ONAP & PITEC buiding blocks

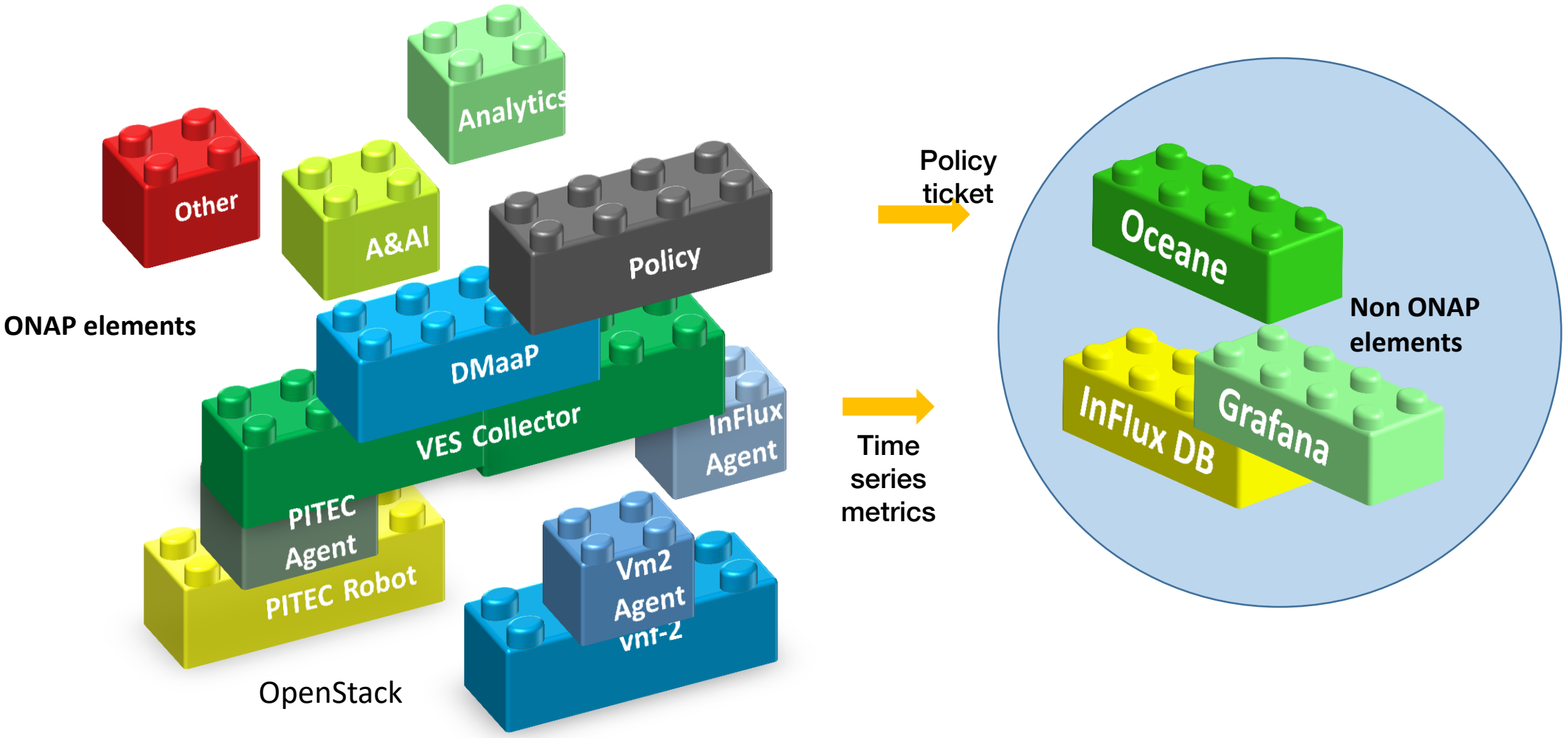

Orange Expert Programme

The issue -Connectivity Failures

GNOC Europe

1. **„Hard" failures:**
   - are the kind of problems every organization understands
     - Fiber cut
     - Power failure takes down routers
     - Hardware failure
   - monitoring systems are good at alerting hard failures
     - i.e. GNOC staff sees something turn red on their screen
     - Engineers have been alerted by monitoring systems

2. **„Soft" failures:**
   - are different and often go undetected
     - Basic connectivity (ping, traceroute, web pages, email) all of it works correctly but…
     - Performance is just poor

PITEC connectivity chain

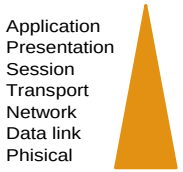

Interconnection Reference model ITU T Layers

RTT [ms]

Expected timing chain:

< < < < <

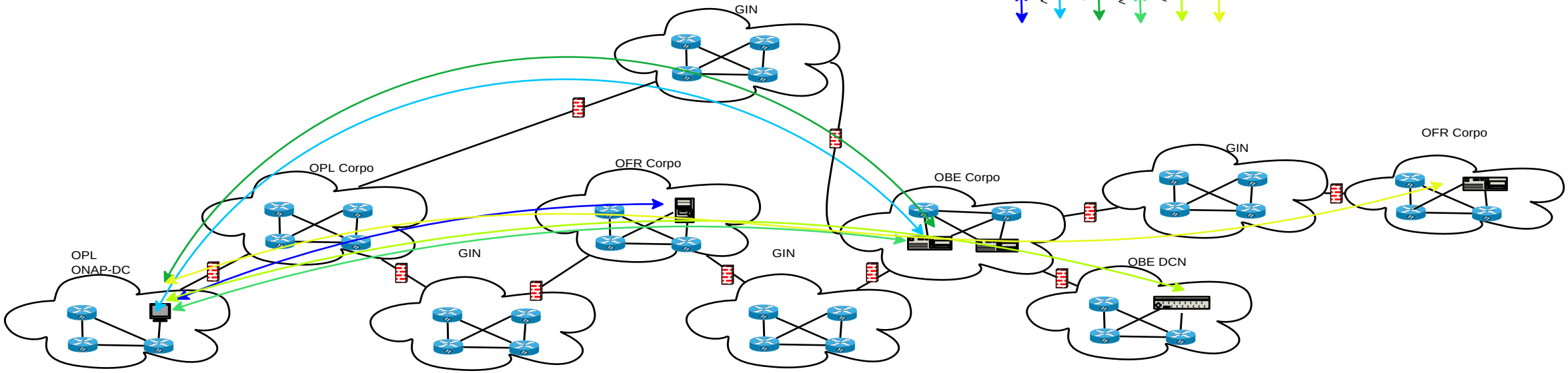

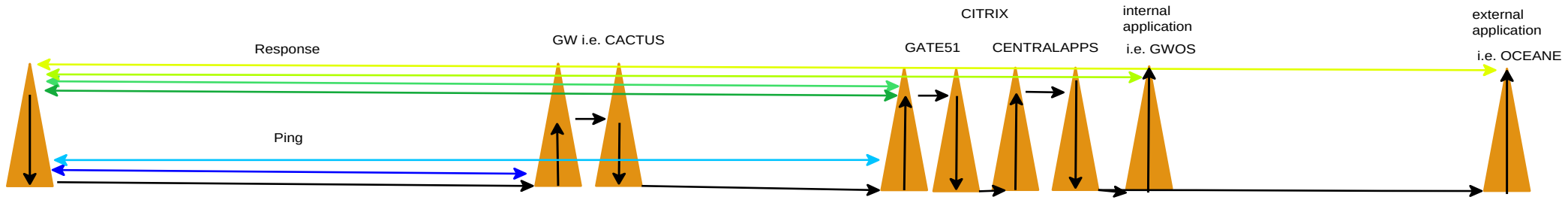

PITEC set up - architecture

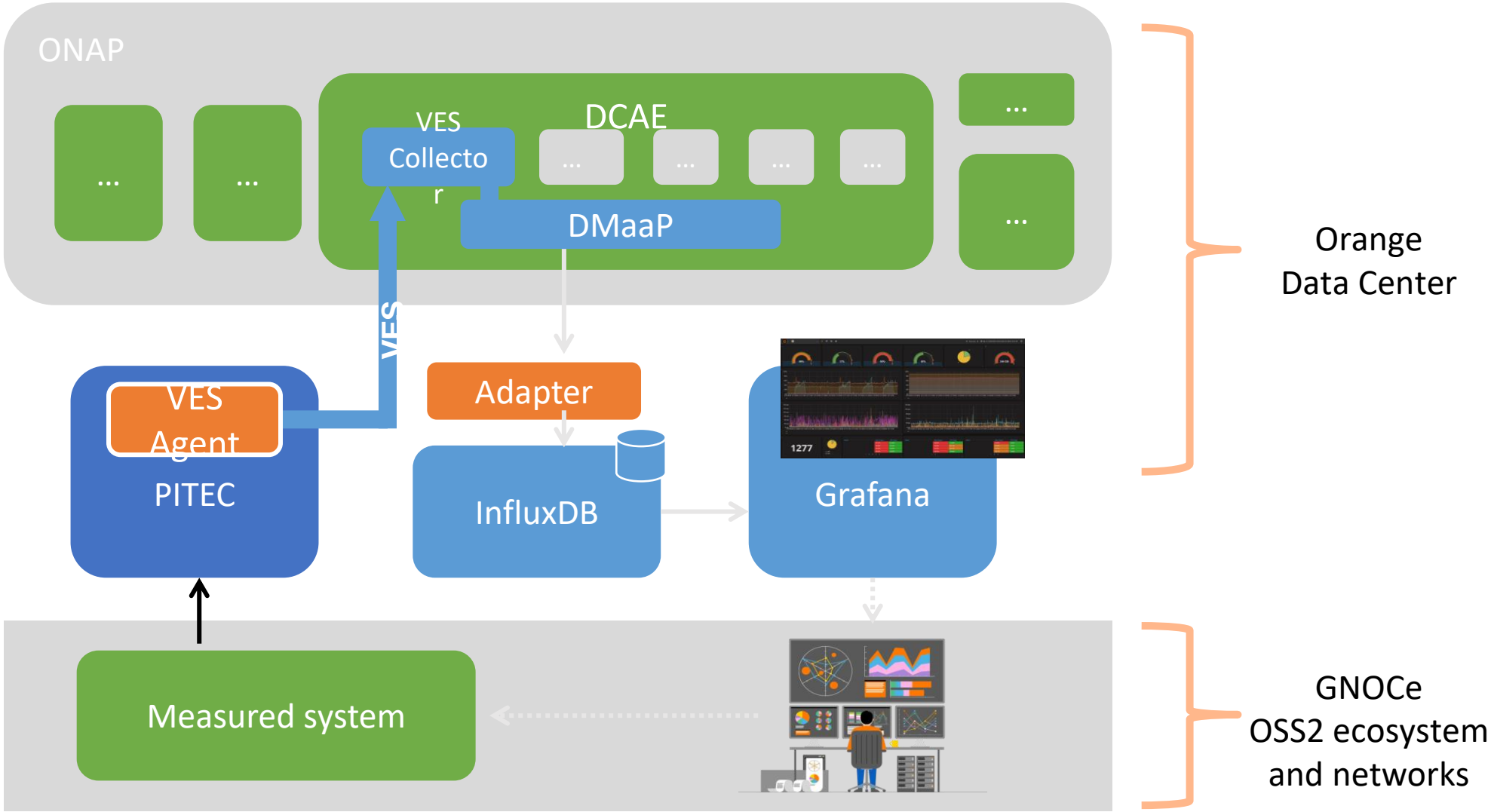

ONAP PITEC set up - containers

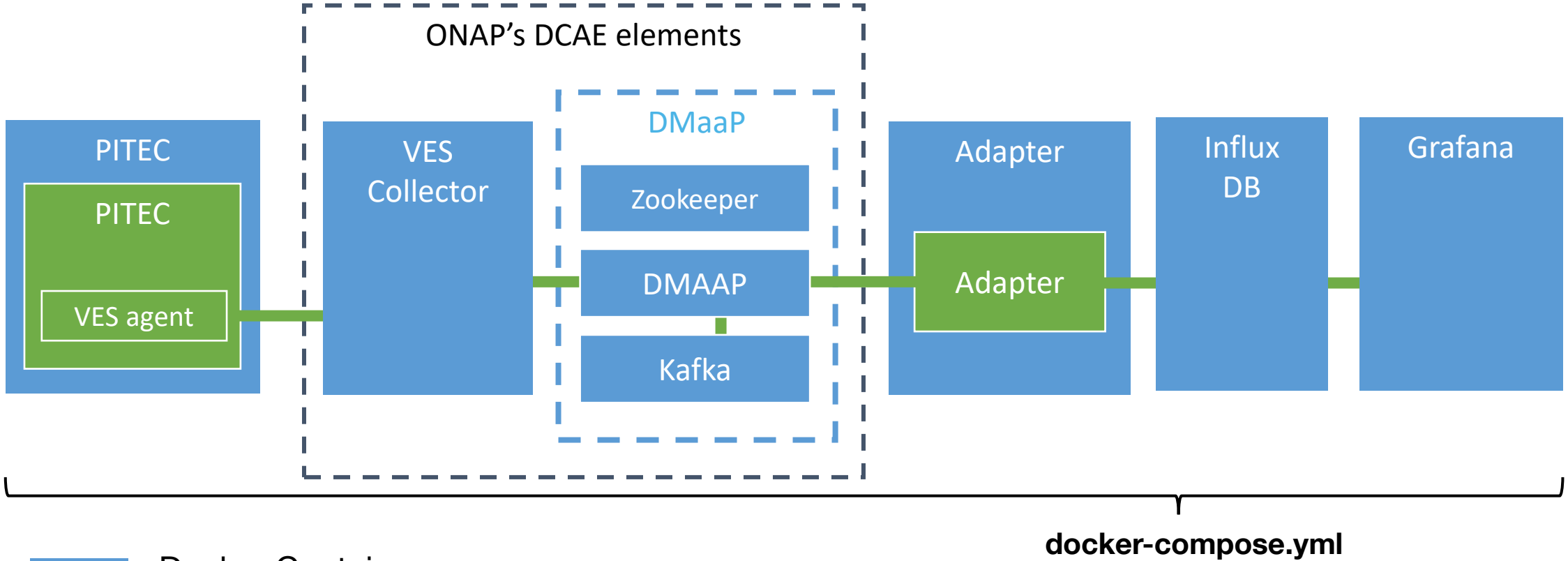

PITEC open loop reaction - ticketing

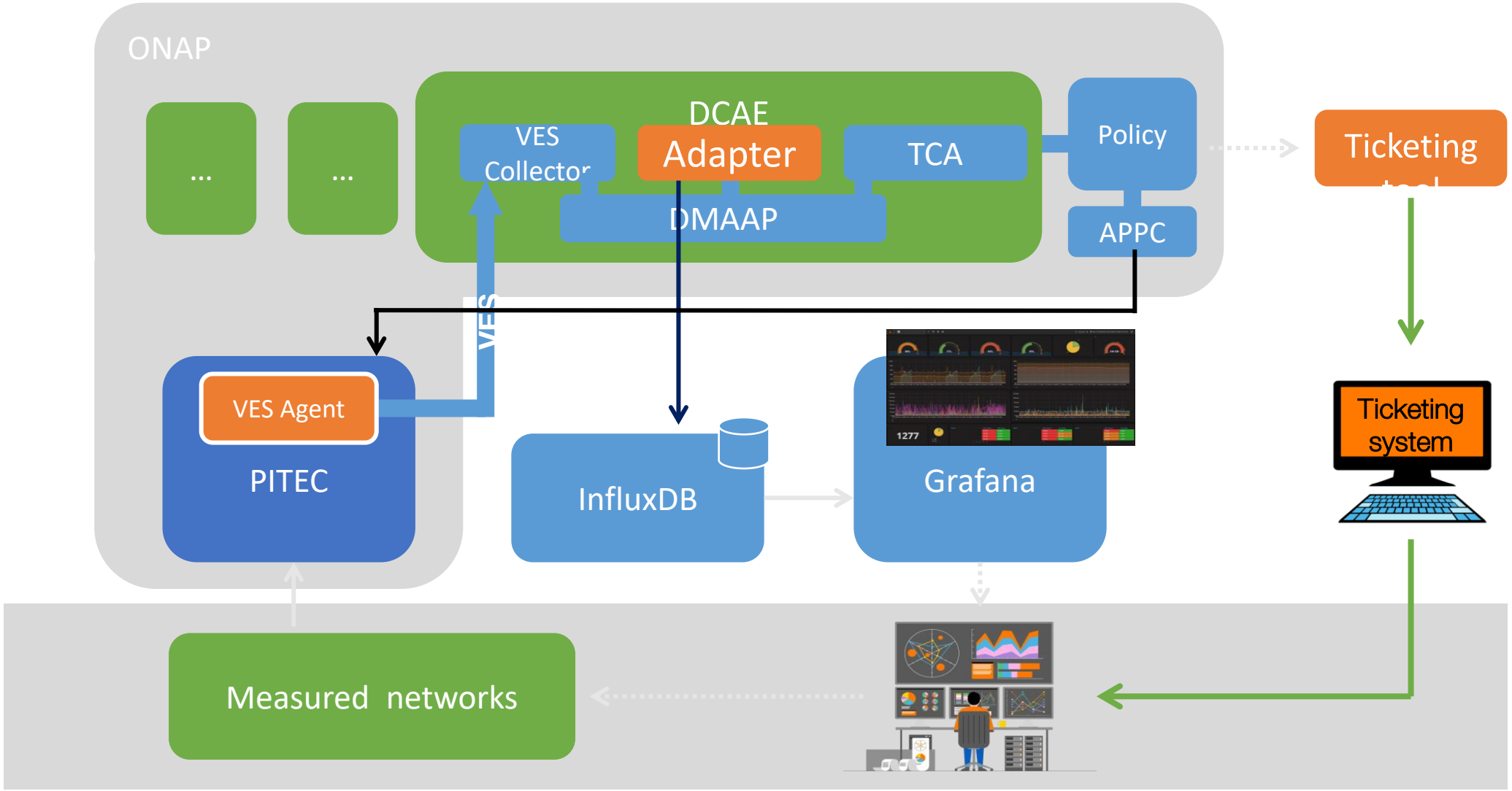

ONAP PITEC

Next steps

orange™

ONAP Analytics for PITEC

Input :

An ordered sequence of Lag values in [ms] at equally spaced time intervals .

Job :

- **Analitycs is based on time stamped connectivity performance measurements**
- **the output value should be understandable for the non-specialist, we decide use 0-100 % scale**
- **Have been decided using the concept of medicine Survival Function as output**
- **Cumulative Distribution Function (Survival Funtion) would be used to normalize & quantify measurments**

Description:

In PITEC case the survival function gives the probability that a connection will survive beyond given specified time (maximum time is given by history buffer of measurment in Analytics).

Analytics should have historical data to process current measurment.

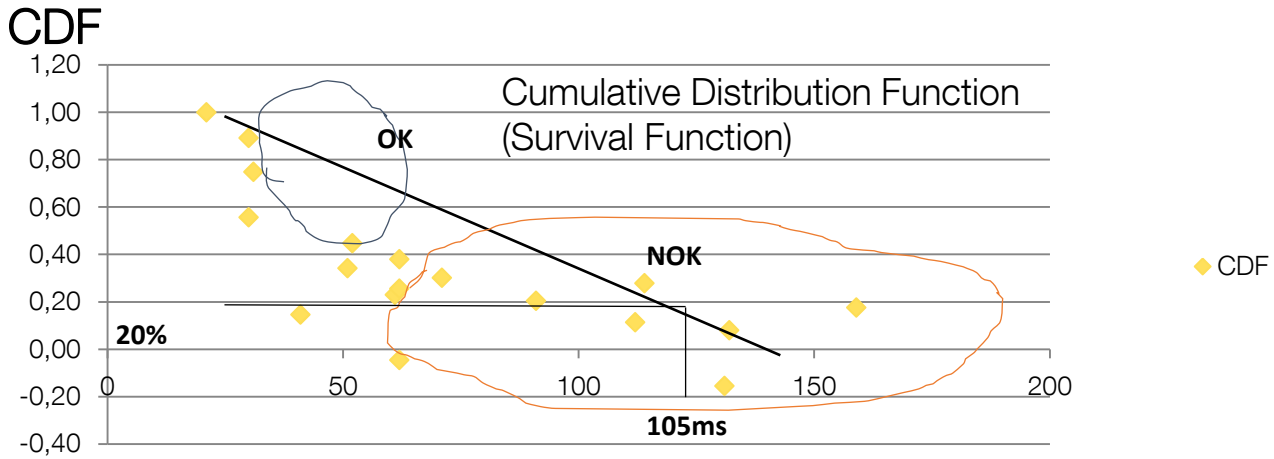

Proposed alarm policy by 20% of health = 105ms RTT

ONAP Policy for PITEC

Input :

Estimated by Analytics current connection Survival Probability.

Description:

- **They determine current business rules to normalize analitycs output in order to apply it to treshold.**
- **Policy may include events history eg. pre-Christmas peak of network utilization**
- **Tasks related to scheduled work or failures (ticketing systems form or automated action) .**
- **Policy should apply coefficient related to known scheduler of everyday routine traffic changes:**

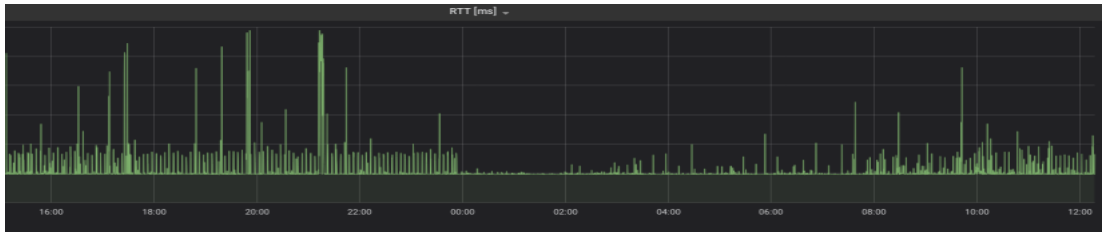

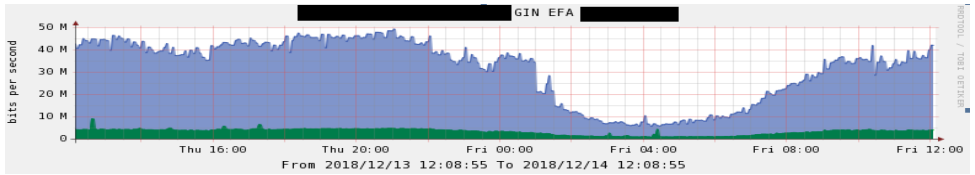

Output :

Current connection health in % .

ONAP Treshold (TCA) for PITEC

Input:

Current connection health in %

Job:

It is used to generate actions by APPC for given by Policy rated, quantized and standarized health value

Description:

The PITEC threshold exceeded event class indicates that ONAP module detects a query that exceeds the threshold specified for the measurement .

Note:

The detection interval for this event is 15 seconds. It is guaranteed that an event will be generated if a query exceeds the specified limit by at least 15 seconds.

However, if a query exceeds the specified threshold by less than 15 seconds, its detection might be missed depending on the timing of the query and the time of last detection sweep

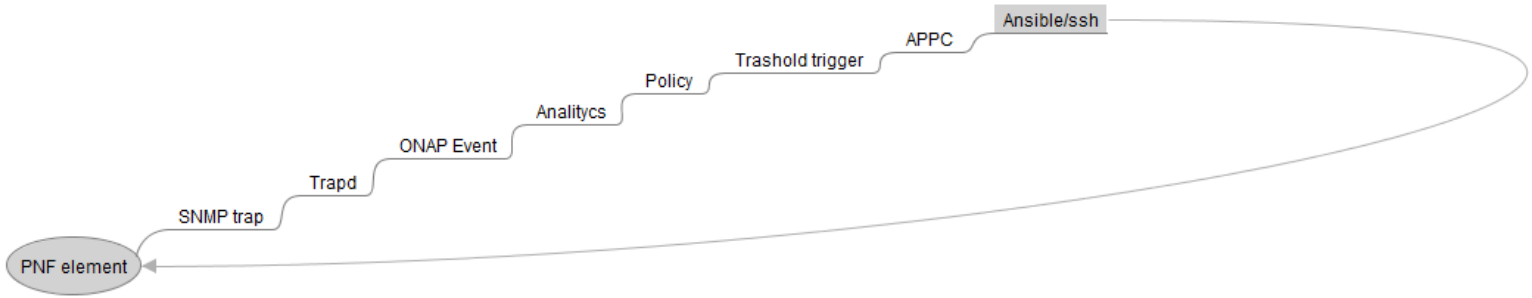

ONAP Automated actions

Job:

After the action is triggered by TCA, it is proposed to change the measurement configuration for given connectivity chain in order to provide better performance overview

Description:

No action:

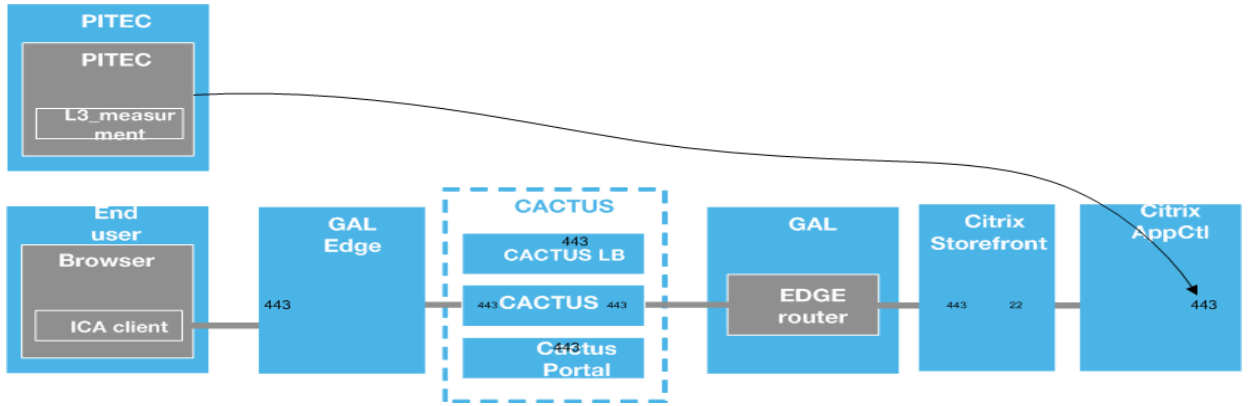

Action in loop:

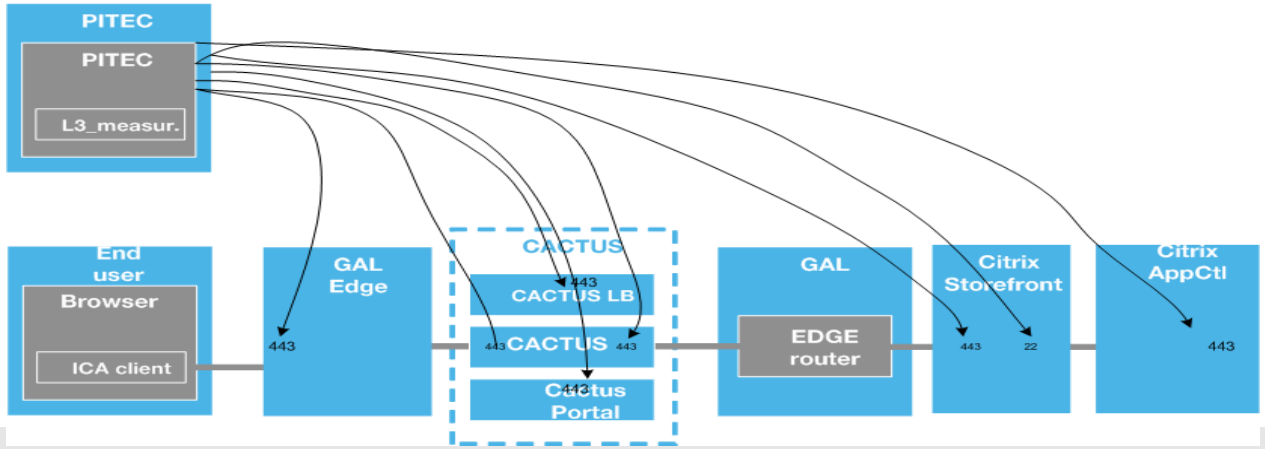

Questions

Orange Expert Programme

GNCC Europe

Connectivity

1. Exemplary OSS application
2. Startup:
    a) Cactus
    b) Citrix
    c) VDI viewer

3. VDI viewer disconnection
4. StartMenu opening lags
5. Tests:
    a) Cactus login overload
    b) Network problems

UX measurement

1. Lags time

2a. Startup time
2b. Startup time
2c. Startup time

3. Amount of drop rate
4. Round trip time
5.
  a) amount rate
  a) amount rate

Proposed management

1. Alarms
2.
    a) analyses/KPI
    b) analyses/KPI
    c) analyses/KPI

3. Alarms
4. Alarms
5.
a) Alarms/KPI number monthly
b) KPI transgression monthly

Orange Expert Programme

GNCC Europe

Connectivity

1. Exemplary OSS application Lags
2. Startup:
    a) Cactus opening
    b) Citrix opening
    c) VDI viewer opening

3. VDI viewer disconnection
4. StartMenu opening (rtt)
5. FailTests:
    a) Cactus login overload
    b) Network problems

Data Preparation

1. Survival Function

2a. Aggregation
2b. Aggregation
2c. Aggregation

3. Hazard rate
4. Survival Function
5.
a) Aggregation
b) Aggregation

Proposed Alarm Threshold

1. Alarm < 20% of health (?)
2. KPI Average total time access to applications
    a) + b) + c)

3. Alarm > 3 x / hour
4. Alarm < 20% of health
5. KPI Connectivity success rate
a) + b)

Orange Expert Programme

GNCC Europe

Thank you

orange™